COVEN TATTOO STUDIO

Studio C
ARCHITECTURE LLC

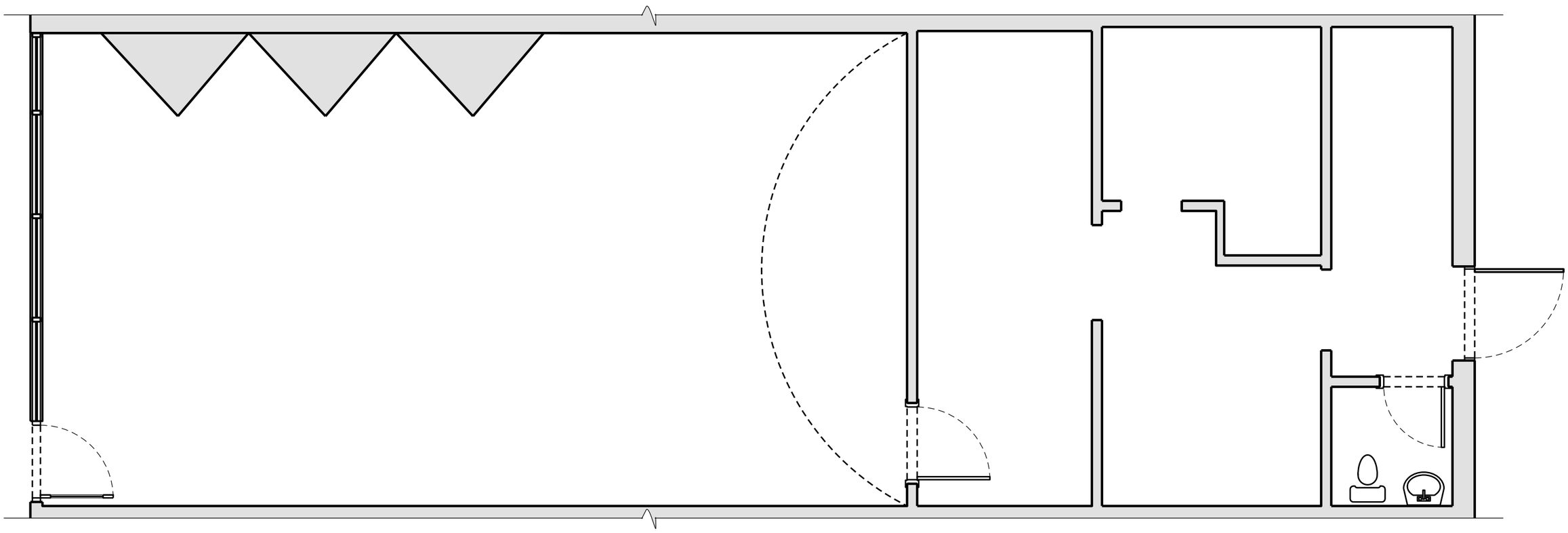

STUDIO C
ARCHITECTURE

COVEN TATTOO STUDIO

EXISTING FIRST
FLOOR PLAN
SCALE: 1/4"=1'-0"

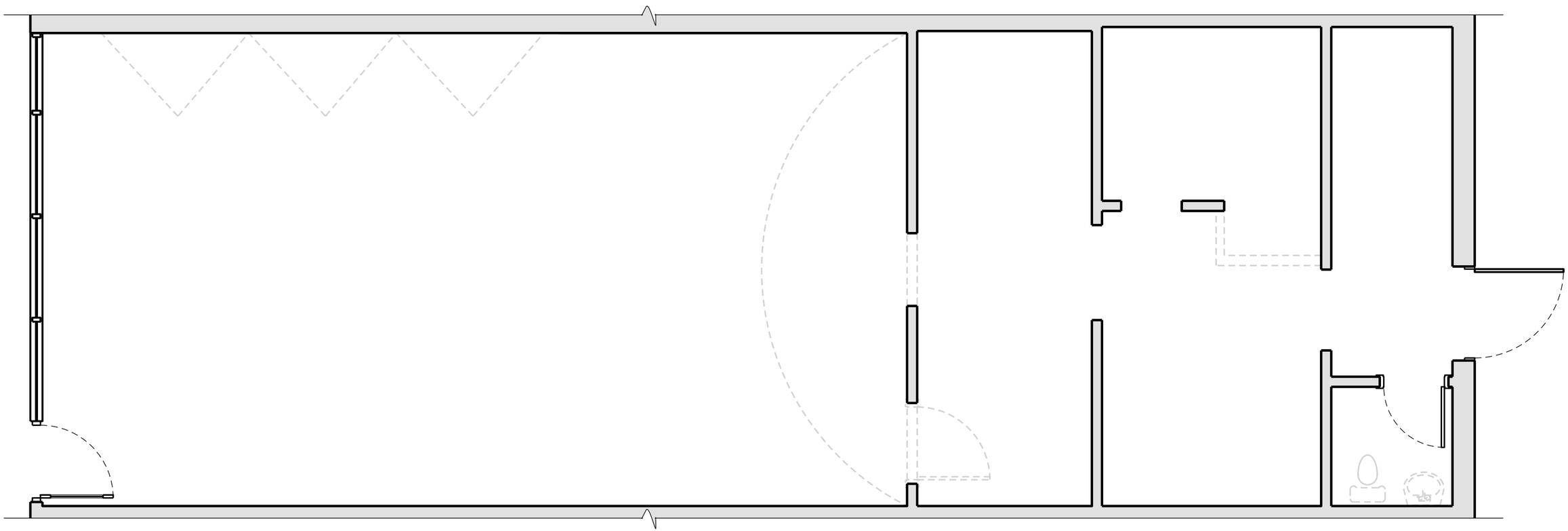

STUDIO C
ARCHITECTURE

COVEN TATTOO STUDIO

FIRST FLOOR
DEMO PLAN
SCALE: 1/4"=1'-0"

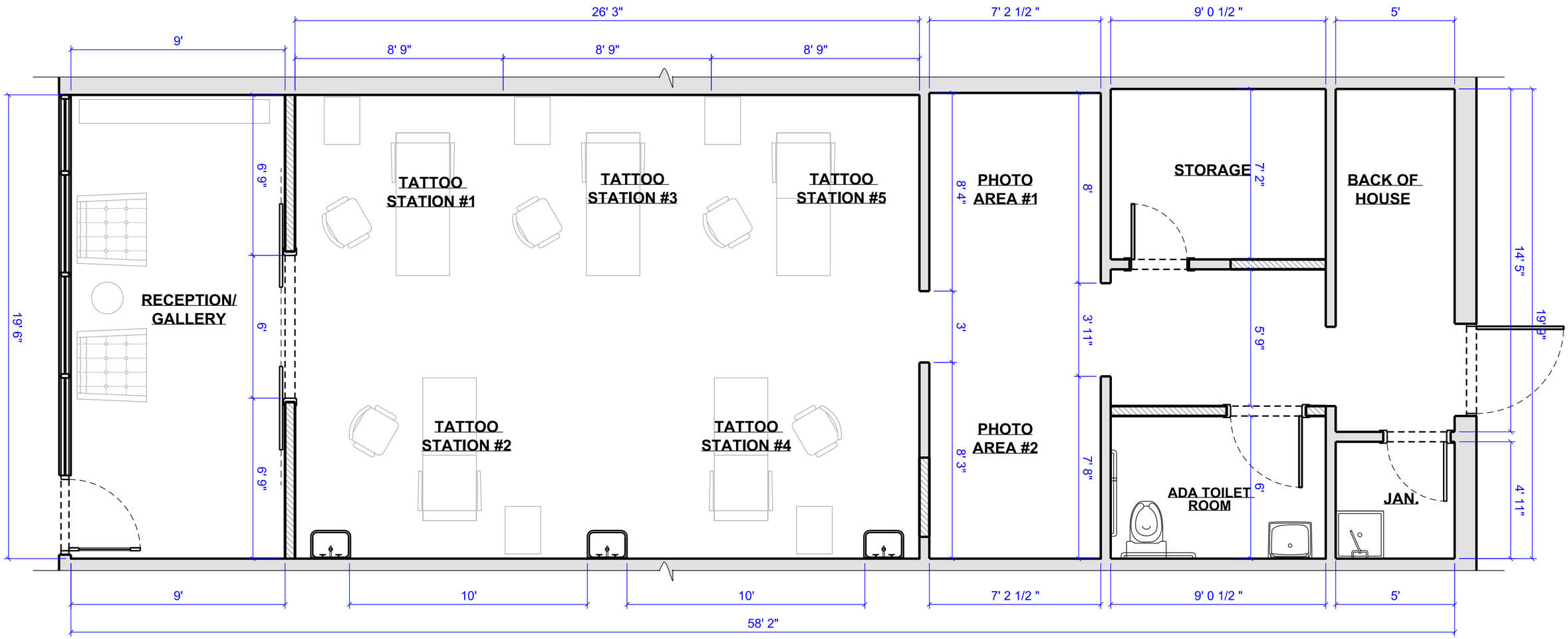

STUDIO C
ARCHITECTURE

COVEN TATTOO STUDIO

PROPOSED FIRST
FLOOR PLAN
SCALE: 1/4"=1'-0"